Lecture-11

Integrated Circuit Logic Families

Classification of digital ICs

Complexity	Gates per chip
Small scale integration (SSI)	Fewer than 12
Medium scale integration (MSI)	12 to 99
Large scale integration (LSI)	100 to 9999
Very large scale integration (VLSI)	10,000 to 99,999
Ultra large scale integration (ULSI)	100,000 to 999,999
Giga scale integration (GSI)	1,000,000 to more

Bipolar and Unipolar digital ICs

- Bipolar ICs- bipolar junction transistor (NPN or PNP)

- Unipolar ICs- unipolar field effect transistor (P channel and N channel MOSFET)

Bipolar digital ICs

Transistor –transistor logic:

- The major family of bipolar digital ICs for over 30 years.
- 74 series was the first series of TTL ICs.
- It is the leading family in the SSI and MSI categories up until the last 12 or so years.

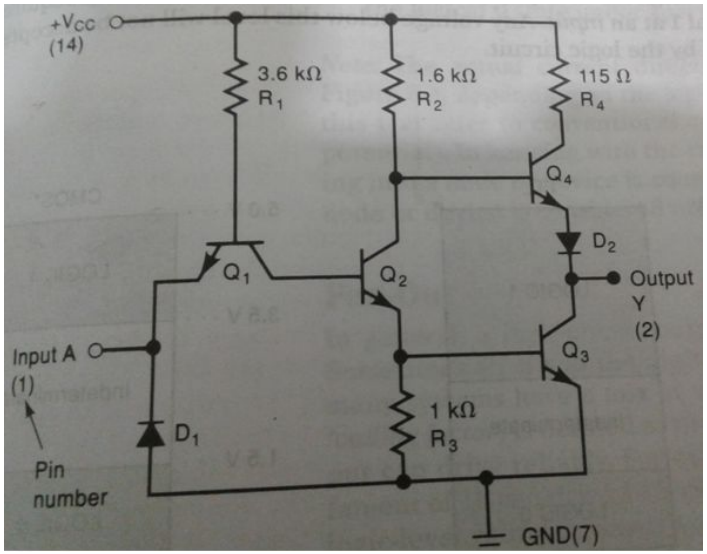

Unipolar digital ICs

Complementary Metal oxide semiconductor (CMOS) → MOSFET

- Simplicity
- Compactness

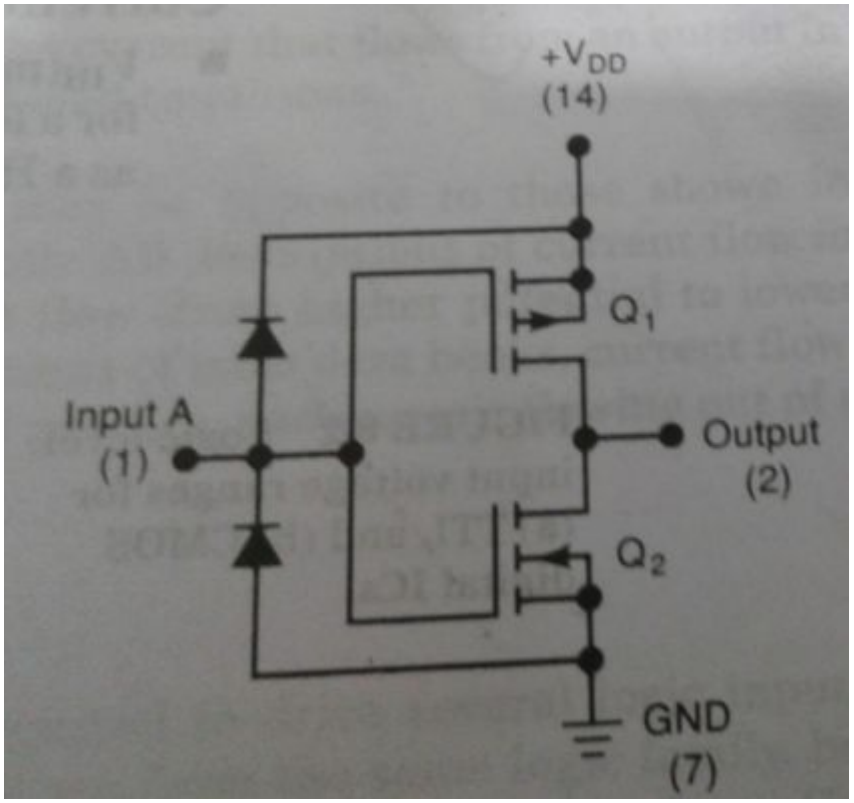

Logic level voltage ranges

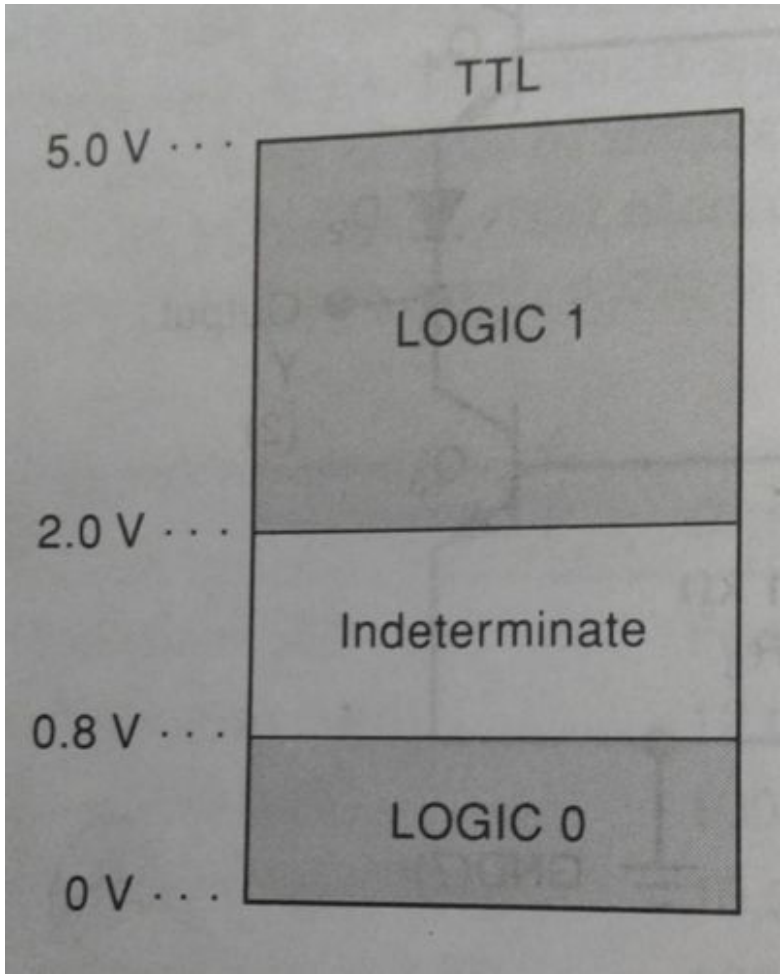

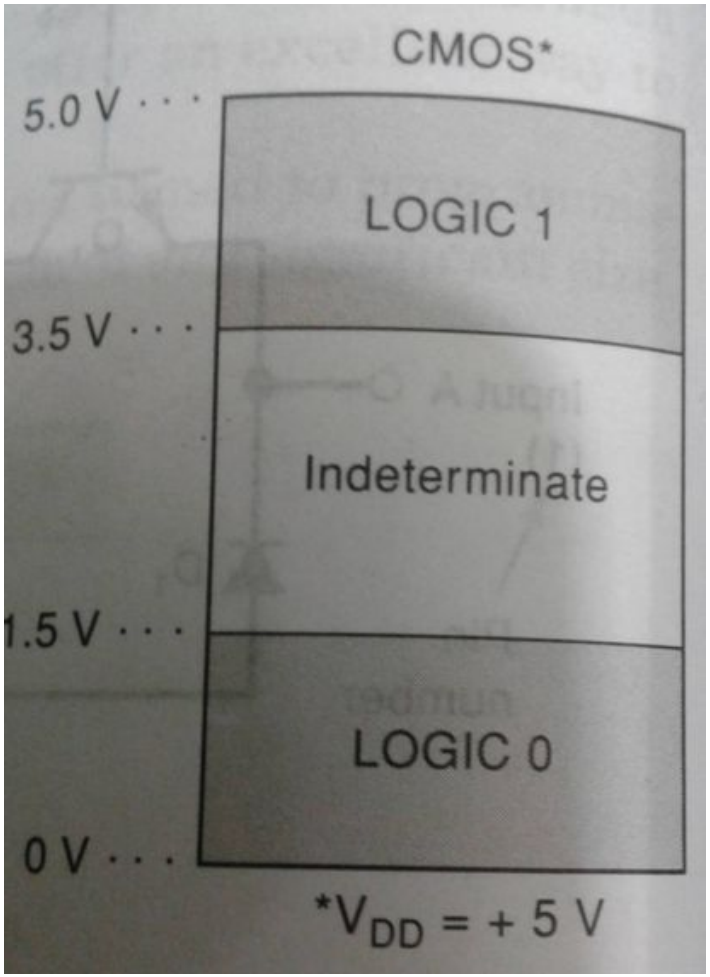

Current and voltage parameters

- High level input voltage –V_{IH} (min): The minimum voltage level required for a logical 1 at an input. Any voltage below this level will not be accepted as HIGH by the logic circuit.

- Low level input voltage –V_{IL} (max): The maximum voltage level required for a logical 0 at an input. Any voltage above this level will not be accepted as a LOW by the logic circuit.

- High level output voltage –V_{OH} (min): The minimum voltage level at a logic circuit output in the logical 1 state under defined load conditions.

- Low level output voltage –V_{OL} (max): The maximum voltage level at a logic circuit output in the logical 0 state under defined load conditions.

Current and voltage parameters

- High level input current –I_{IH} : The current that flows into an input when a specified high level voltage is applied to that input.

- Low level input current –I_{IL} : The current that flows into an input when a specified high level voltage is applied to that input.

- High level output current –I_{OH} : The current that flows from an output in the logical 1 state under specified load conditions.

- Low level output current –I_{OL} : The current that flows from an output in the logical 0 state under specified load conditions.

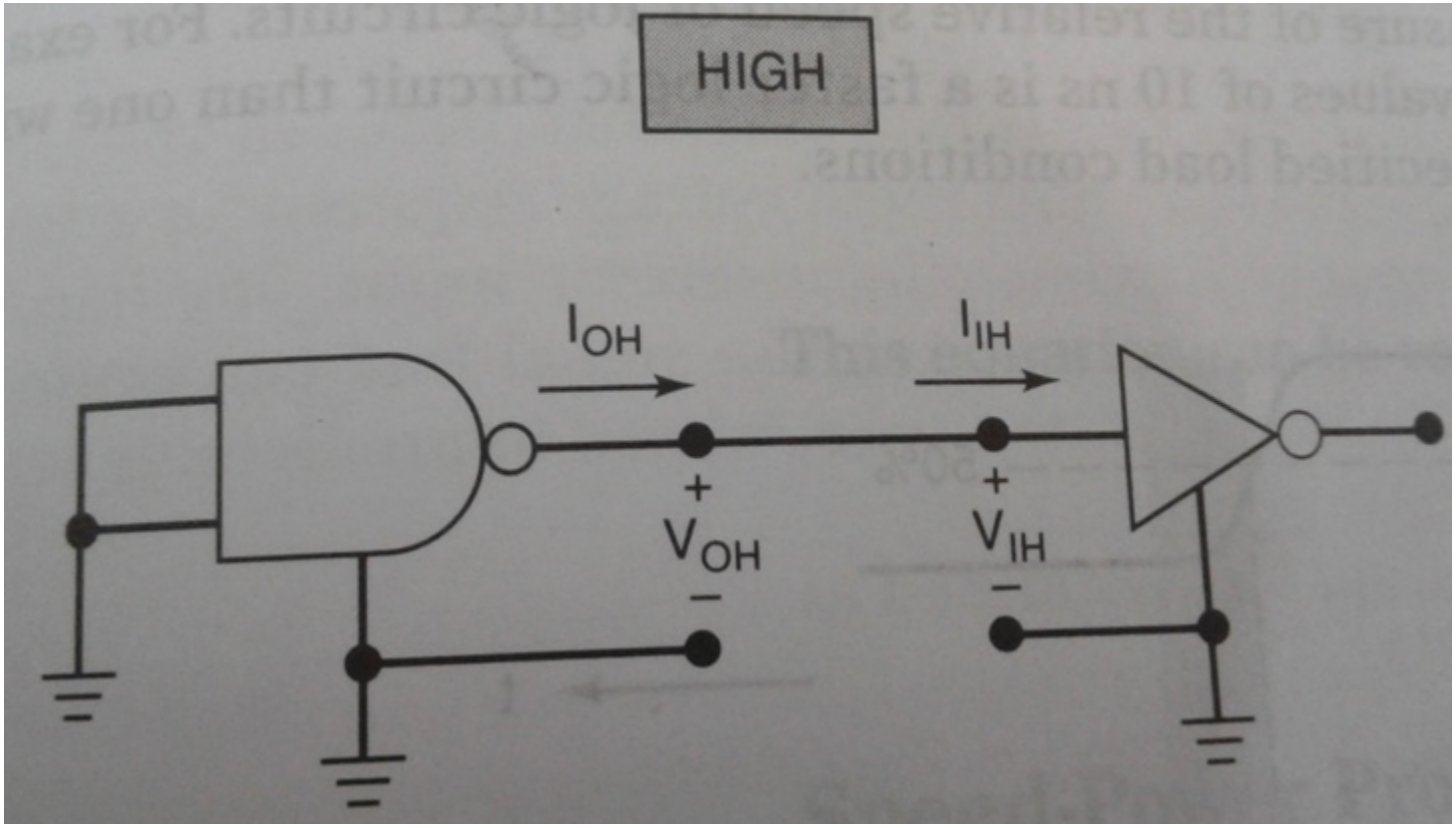

Currents and voltages of the logic states

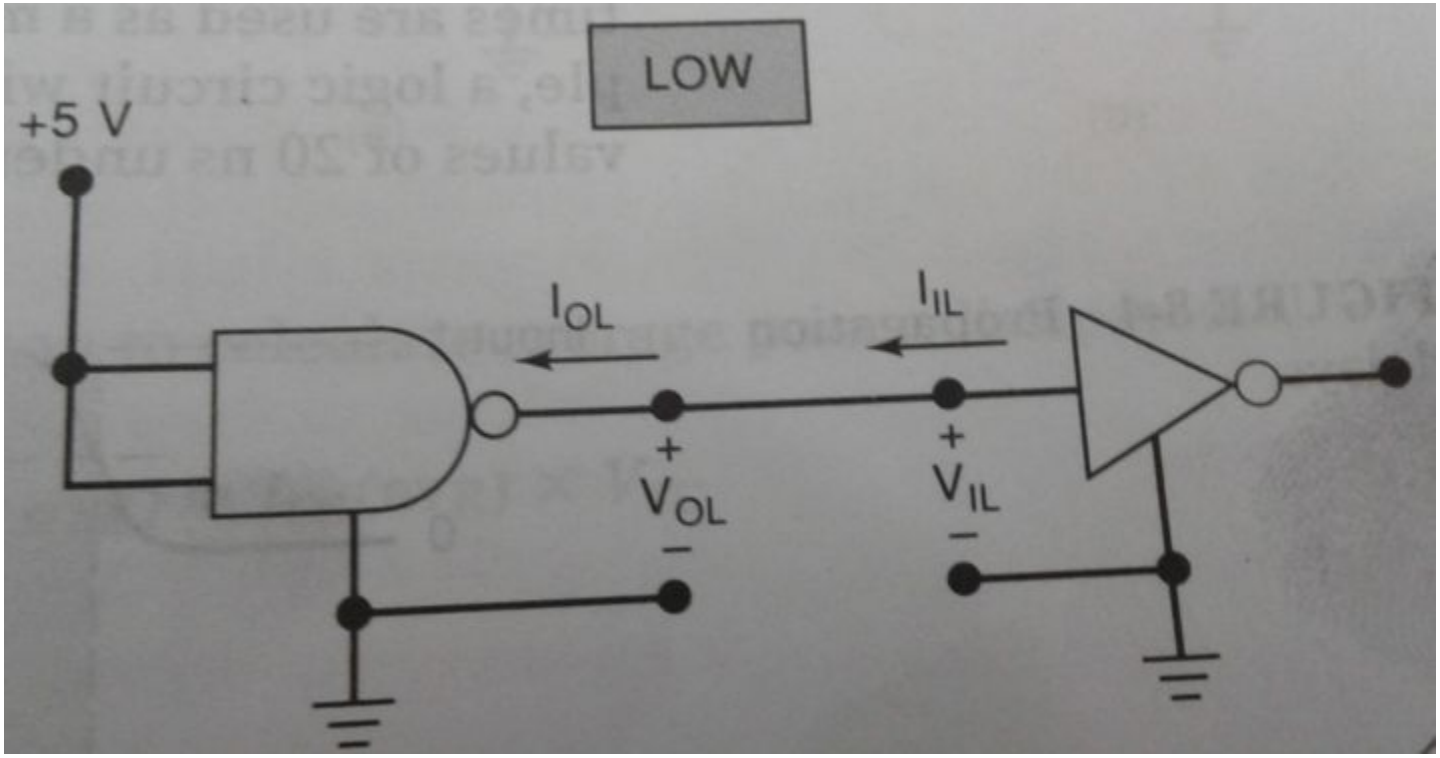

Currents and voltages of the logic states